PRODUCED BY AN AUTODESK EDUCATIONAL PRODUCT

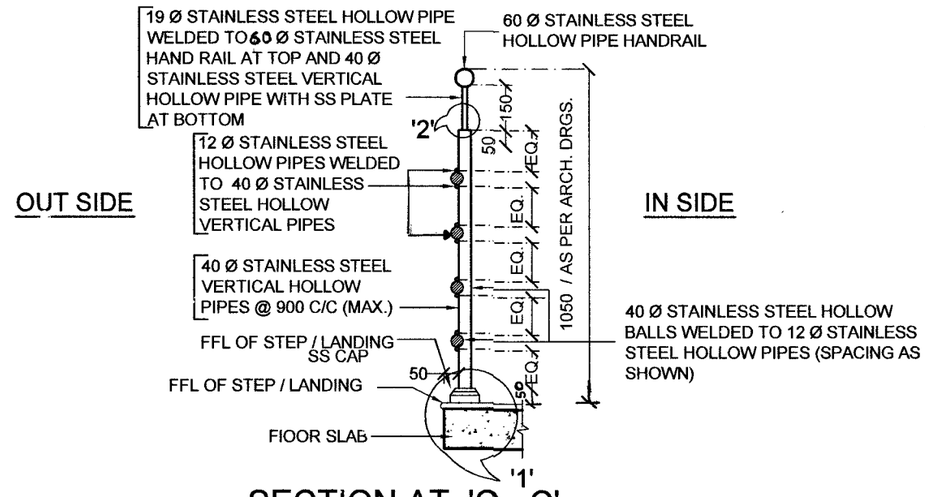

SECTION AT 'C - C'

SCALE 1 : 20

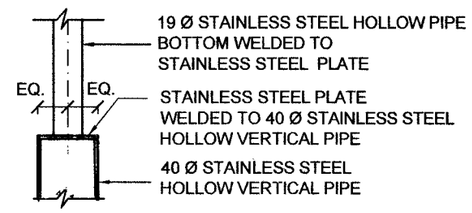

DETAIL AT - '2'

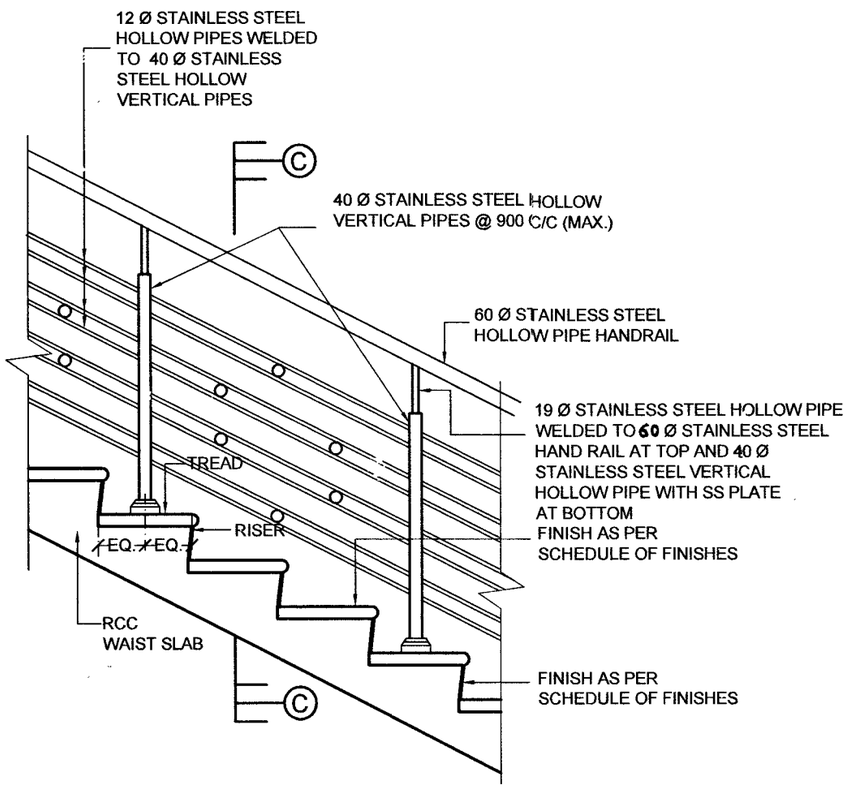

DETAILS OF STEPS & STAINLESS STEEL RAILING FOR STAIR CASE TYPE - 3

SCALE 1 : 20

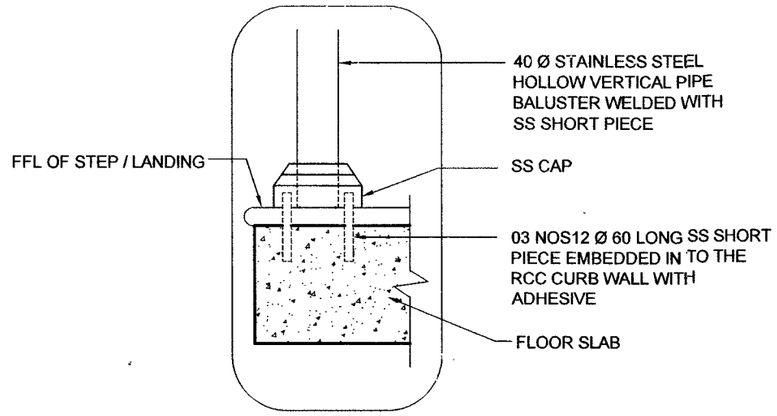

DETAIL AT - '1'

SL. NO.	NOTES

SL NO	DATE	DESCRIPTION	SIGN.

REVISIONS

TYPICAL DETAILS OF STAINLESS STEEL (SS) RAILING FOR STAIR CASE

TYPE - 3

DATE	20 - 6 - 2022	CHIEF ENGINEER (NAVY) VISAKHAPATNAM ZONE	SHT. NO. 2/2
DRN	K. USHA		
TCD			
CKD			
SCALE	AS SHOWN	REF. DRG.NO.CEVZ/2022/TD-20	

AAD (ARCH)	JT. DIR. (ARCH)	DIRECTOR (ARCH) FOR CHIEF ENGINEER

PRODUCED BY AN AUTODESK EDUCATIONAL PRODUCT